SALES DRAWING SALES DRAWING SALES DRAWING

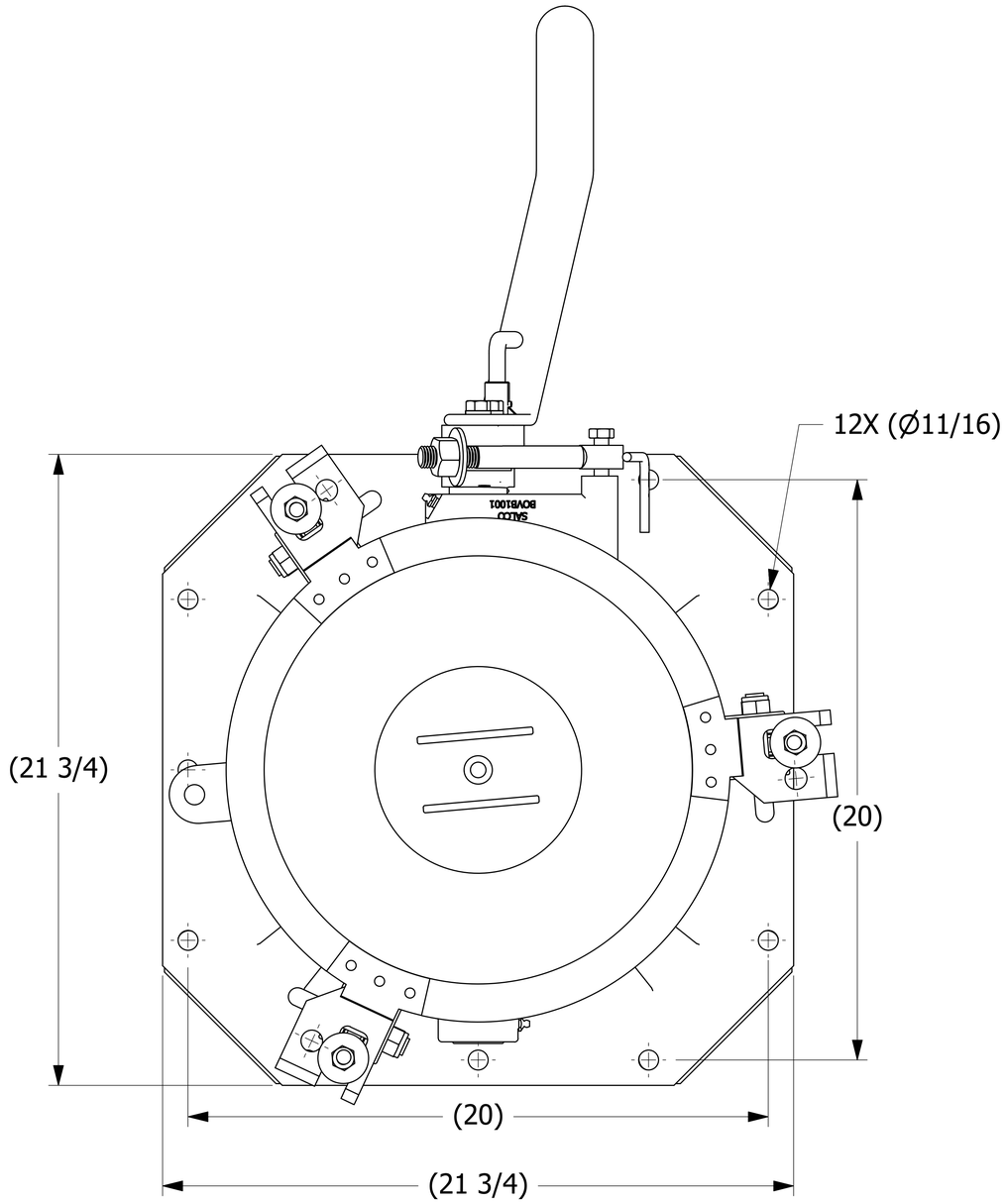

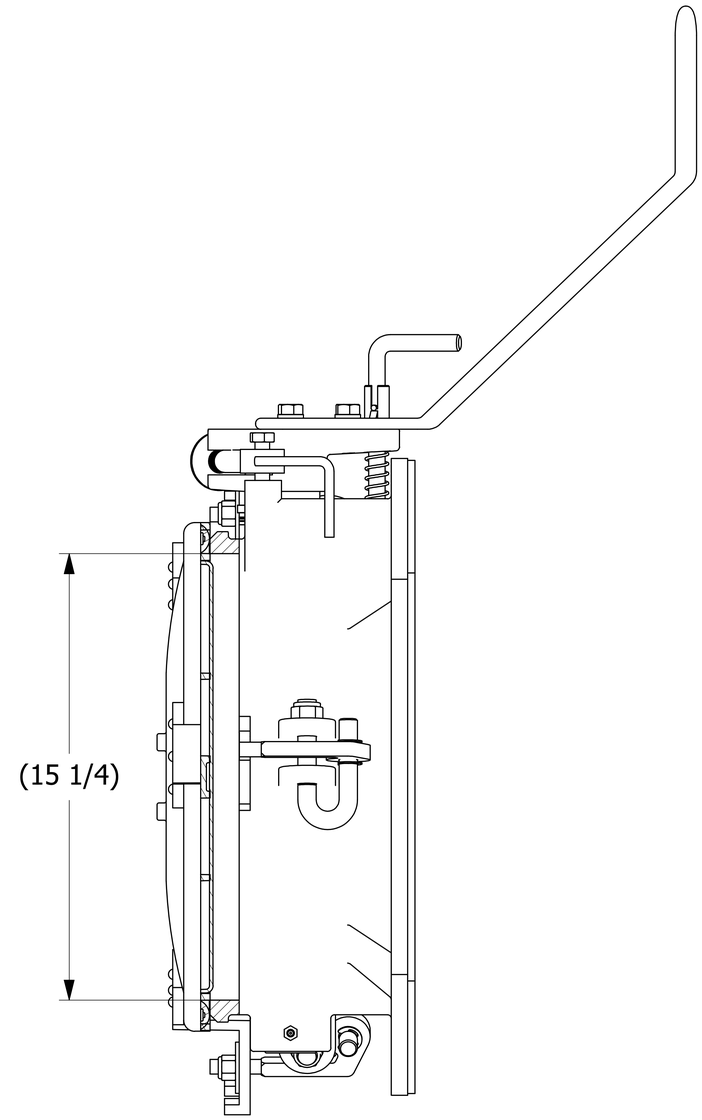

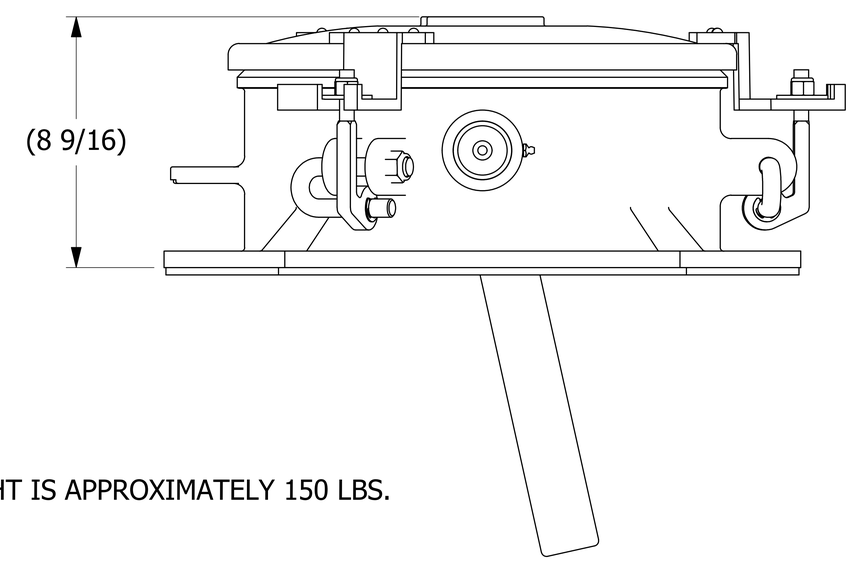

NOTE:
WEIGHT IS APPROXIMATELY 150 LBS.

REV	BY	DATE	REF #	
C	WEB	10/27/20	202010271000	WEB
				PUB

UNLESS OTHERWISE SPECIFIED
DIMENSIONAL TOLERANCES
FRACTIONAL: ±1/16
X.XX: ±.03
X.XXX: ±.015
ANGULAR: ±1°
DEBURR ALL SHARP EDGES.
ALL MACHINED SURFACES TO HAVE A 125 RMS FINISH UNLESS NOTED OTHERWISE.
THIRD ANGLE PROJECTION

DRAWN BY:	CHL
CHECKED BY:	VD
PROTOTYPE DATE:	3/18/2013
APPROVED FOR PRODUCTION BY:	BG
PRODUCTION DATE:	7/2/2013
SIZE:	E
DRAWING #:	35749

SALCO PRODUCTS, INC.

PART NAME: BUTTERFLY VALVE ASSEMBLY

MATERIAL: DI/ABS

PROJECT #: 070306 | SHEET #: 1 OF 2 | SCALE: 1 / 2

PART #: BOV1001A1

THIS PRINT, PROPERTY OF SALCO PRODUCTS INC, CONTAINS PROPRIETARY INFORMATION AND MUST NOT BE COPIED, REPRODUCED, OR USED DETRIMENTALLY TO OUR INTEREST.

SALES DRAWING SALES DRAWING SALES DRAWING

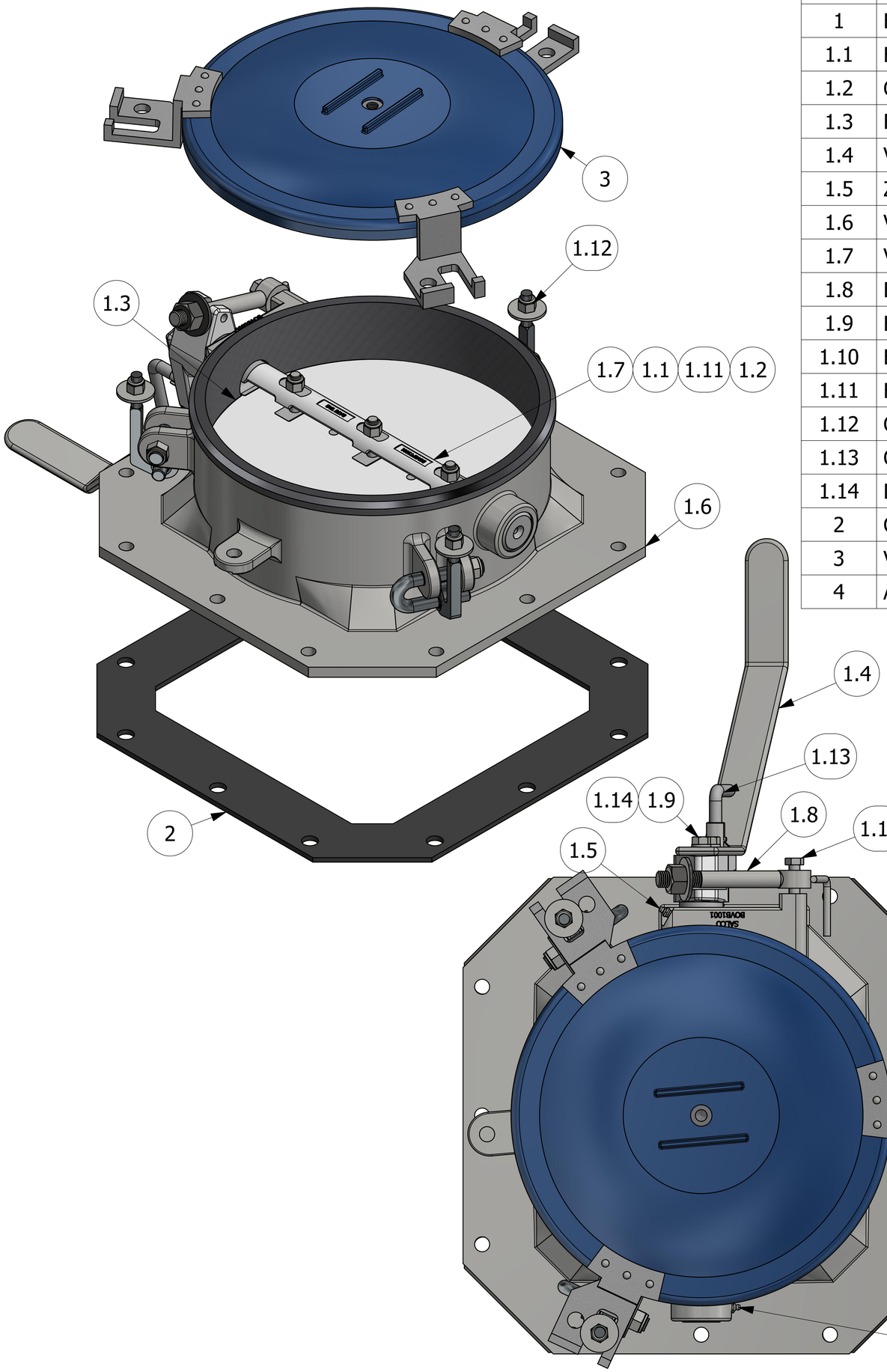

NO.	PART NAME	PART#	REQ'D	MATERIAL
1	BOTTOM OUTLET VALVE	BOV1001	1	DUCTILE IRON
1.1	HEX LOCK NUT 1/2"-20	A16502	3	CS Z/P
1.2	O-RING 2.020"X.210" AS568A-326	A23349	2	NEOPRENE
1.3	FLAPPER PLATE	BOV1001FP	1	CARBON STEEL
1.4	VALVE HANDLE	BOV1001VH	1	CARBON STEEL
1.5	ZERK FITTING 1/8"	BOV10645	2	303 SS
1.6	VALVE BODY	BOVB1001	1	DUCTILE IRON
1.7	VALVE SHAFT	BOVSFT1001	1	DUCTILE IRON
1.8	EYEBOLT LOCK ASSEMBLY 3/4"X6 1/2"	EBL3465XA	1	CS
1.9	HEX BOLT 1/2"-13X1"	HB13205	2	CS Z/P
1.10	BOLT HEX 5/8-11 X 3	HB13315	1	CS Z/P
1.11	HEX BOLT 1/2"-20X2 1/2"	HB18916	3	CS Z/P
1.12	OUTLET COVER LOCK	LC41222A	3	CS Z/P
1.13	OUTLET COVER LOCK	LP916A	1	CS Z/P
1.14	LOCK WASHER 1/2"	LW33626	2	CS Z/P
2	CARBON BLACK VALVE GASKET	CBN001	1	BLACK NEOPRENE
3	VALVE COVER 16"	PHC16CBVA	1	ABS/NEOPRENE
4	ANTI-RUST BAG CHLORINE PLATE (NOT SHOWN)	ARB-CL-PLATE	1	VCI POLY

SALES DRAWING SALES DRAWING SALES DRAWING

UNLESS OTHERWISE SPECIFIED
DIMENSIONAL TOLERANCES
FRACTIONAL: ±1/16
X.XX: ±.03
X.XXX: ±.015
ANGULAR: ±1°
DEBURR ALL SHARP EDGES.
ALL MACHINED SURFACES TO HAVE A 125 RMS FINISH UNLESS NOTED OTHERWISE.
THIRD ANGLE PROJECTION

DRAWN BY:	CHL
CHECKED BY:	VD
PROTOTYPE DATE:	3/18/2013
APPROVED FOR PRODUCTION BY:	BG
PRODUCTION DATE:	7/2/2013
SIZE:	E
DRAWING #:	35749

REV	BY	DATE	REF #	PUB
C	WEB	10/27/20	202010271000	WEB

SALCO PRODUCTS, INC.

PART NAME: BUTTERFLY VALVE ASSEMBLY

MATERIAL: SEE BOM

PROJECT #: 070306 | SHEET #: 2 OF 2 | SCALE: 1 / 2

PART #: BOV1001A1

THIS PRINT, PROPERTY OF SALCO PRODUCTS INC, CONTAINS PROPRIETARY INFORMATION AND MUST NOT BE COPIED, REPRODUCED, OR USED DETRIMENTALLY TO OUR INTEREST.